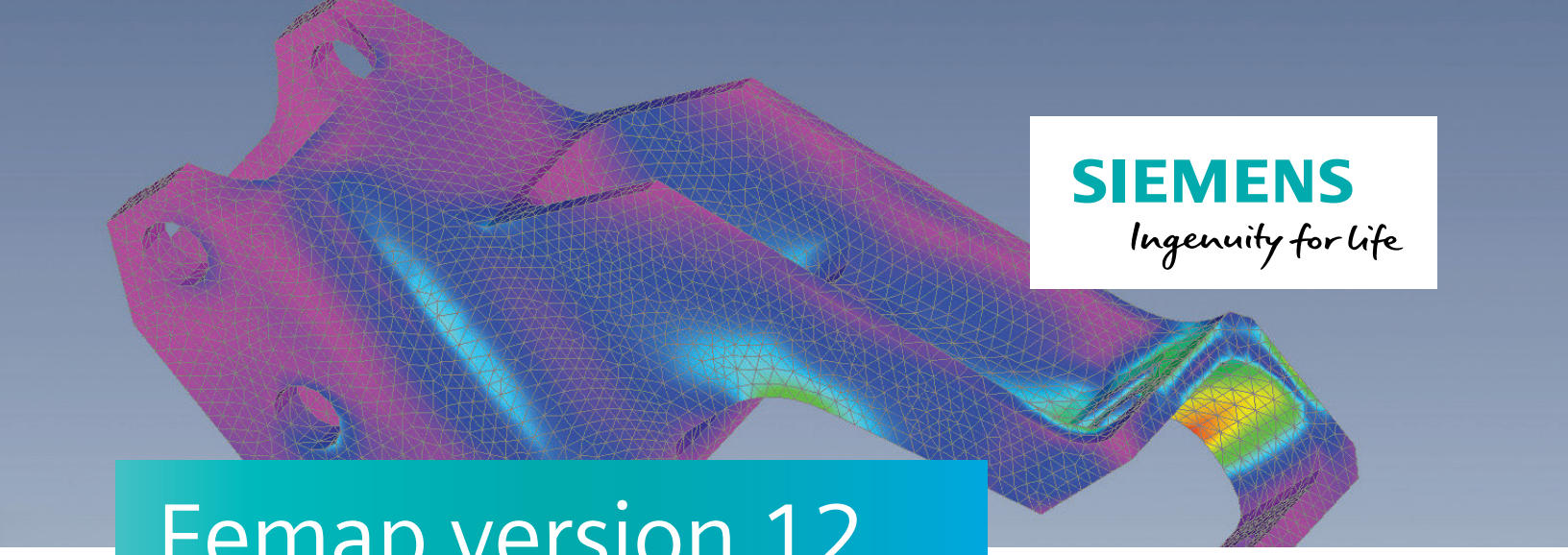

SIEMENS
Ingenuity for life

Femap version 12

Benefits

- Interactive control and clearer model viewing
- Improved workflows and enhanced modeling tools
- Extended range of simulation applications

Features

- Updates to visualization and user interface
- Extended pre- and postprocessing toolbox capabilities
- Support for new solver solution sequences

Summary

Femap™ software version 12 is the latest release of the standalone finite element modeling pre- and postprocessor for engineering simulation and analysis. Femap is CAD-independent and can import geometry from all major CAD platforms and supports most CAD formats. Femap also works in combination with a wide variety of finite element analysis solvers, including the industry-leading NX™ Nastran® software.

Femap version 12 provides a number of interactive visualization and user interface (UI) updates improving ease-of-use, as well as enhancements to geometry pre- and postprocessing functionality with extended solver support. New solution capabilities include support for NX Nastran multi-step nonlinear analyses and topology optimization with extended design optimization functionality.

Visualization and user interface

User interface updates

The first thing you will notice when you start Femap version 12 is the refreshed appearance of the user interface. The modernized Femap look is evident with new color schemes that provide better viewing on large displays and high-resolution monitors. The panes and dialog boxes have also been updated and standardized to reflect the control and behavior model of the of latest Windows version, enhancing the user experience and providing a cleaner look to the software.

Femap version 12 allows you to interactively move and reposition graphics screen entities including titles, axes and the contour legend simply by using the mouse. You can select and modify the desired orientation for viewing the model directly from the new view axes cube, by selecting the faces, edges or corners. On the contour legend you can set maxima and minima quantities directly, vary the number of levels displayed and optionally set the levels to be smooth or discrete.

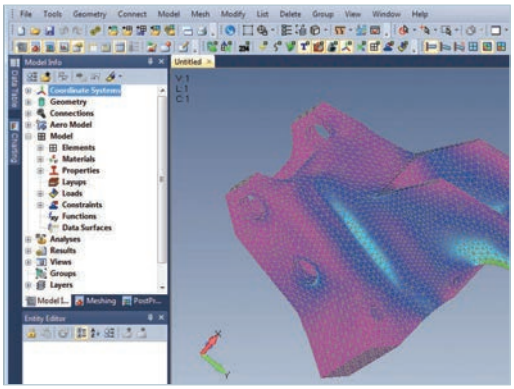

Femap version 12

Visualization enhancements

Visualization enhancements include new feature and silhouette lines that outline finite element (FE) model features to aid model viewing. Feature lines display hard edges while silhouette lines highlight curved areas where the model disappears from view. The feature and silhouette lines are mesh-based, and display is controlled by a user-modifiable break angle.

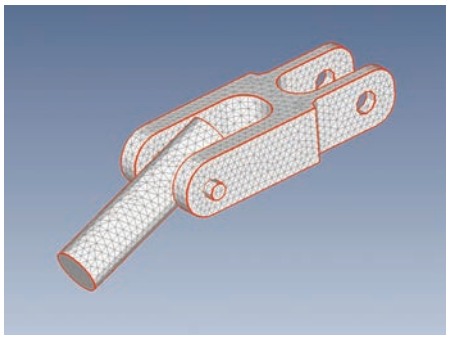

Improved graphics performance

Version 12 now offers a new "best possible" graphics preference that examines the available graphics hardware and automatically sets a configuration that yields the best graphics performance.

Geometry enhancements

Geometry stitching

A new geometry stitching algorithm introduced in version 12 improves the performance and method by which composite surfaces are connected together. This algorithm, which uses multi-body processing controlled by a tolerance, makes it much easier to combine surfaces and composite surfaces, with overlapping edges and gaps, in a single command to create fully connected geometry that is ready to mesh.

Handling of combined curve and surface geometry also extends to Boolean operations, where interfacing geometry is recombined and updated automatically according to the operation undertaken. Combined and boundary curves and surfaces are preserved during solid operations and new combined geometry is created as required to maintain geometry topology.

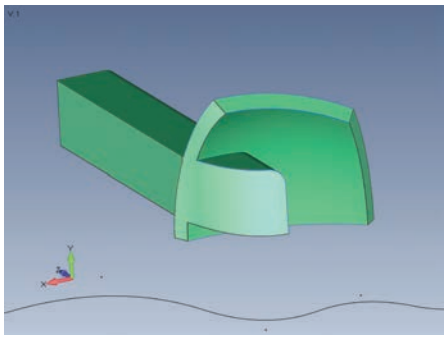

Surface alignment

Femap version 12 introduces a new surface alignment command that can remedy geometry misalignment that may arise, for example when combining periodic surfaces with data imported from various CAD systems. Aligning geometry prior to meshing minimizes the creation of disruptive short edges and facilitates the generation of a good finite element mesh. The surface alignment command also includes an automatic alignment method which can be applied to all or a number of selected surfaces.

Surface between curves

Geometry enhancements include an enhanced curve-to-curve surface connection option that extends the previous ruled connection method by adding tangent-to-surface and vector-aligned options.

Performance improvement

The feature removal capability has been improved to maximize performance, and is now more than 30 times faster.

Preprocessing enhancements

Meshing toolbox

The washer and pad meshing improvement tools now extend to solid element (hexa and tetra) as well as planar element models. Also, the washer tool can now modify the mesh around non-circular holes, including cutouts with sharp corners, to create the best possible mesh around any cutout.

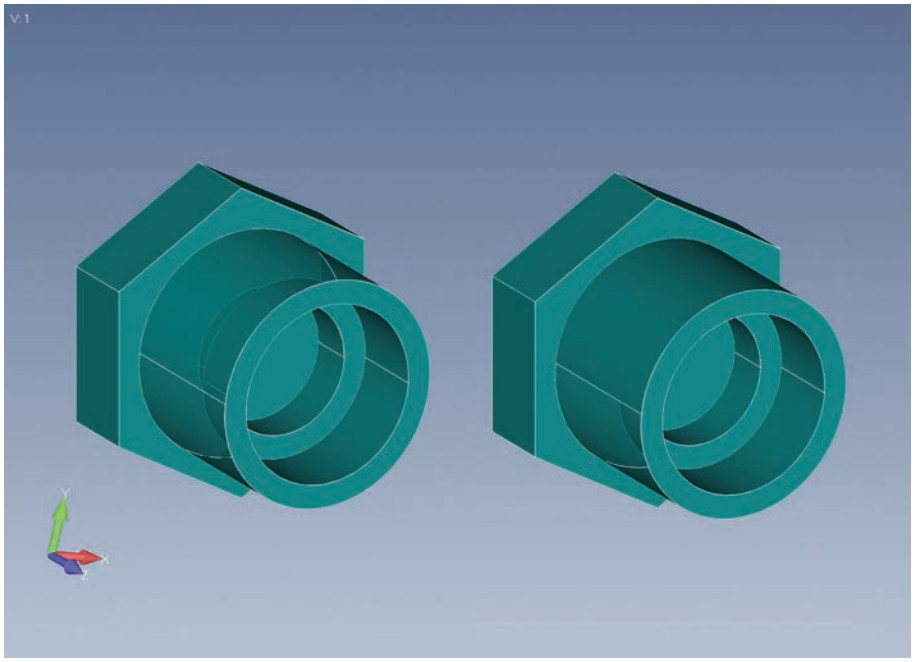

Updated copy and move command

Methods to copy or move geometry with associated FE data (or vice versa) are much easier in version 12 and can be executed with just a single command. You can copy, rotate or reflect geometry with associated mesh with options to also include loads, constraints, connections and regions. Also, you can copy using a pattern, create multiple repetitions, make use of the auto-repeat capability, and there are further controls for block and offset numbering options.

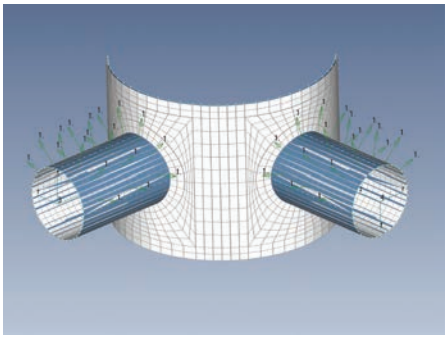

Beam centerline finder

You can now automatically determine the centerline of a solid beam structure, making it easier to model it using 1D beam elements. While executing this command, the materials can either be based on the original solid attributes or be created anew. Geometry selection options include curves, solids and tubes, and the appropriate cross-sections are calculated automatically.

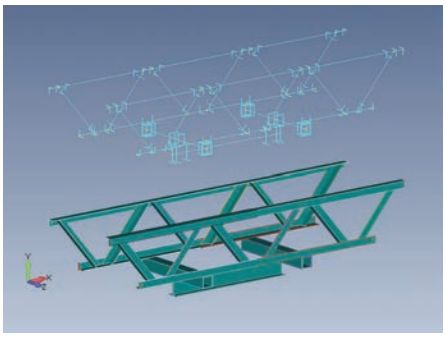

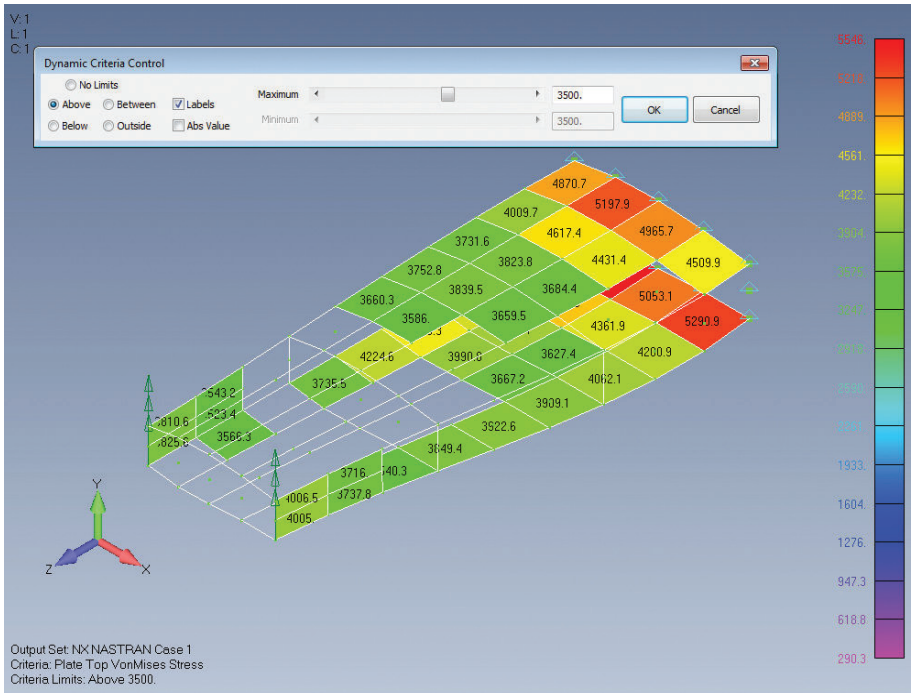

Data mapping enhancements

A criteria-based method of mapping model output onto elements to create a load definition is now available in version 12. A criteria option is also available when defining an output map data surface in the data surface editor.

Discrete value plots

You can also create discrete value color plots based on an element value or range of values including entity ID, materials and properties.

Mesh point editor

In version 12 you have access to a new mesh point editor capability, with which you can specify hard points on the geometry that you want to appear as nodes in any mesh generated subsequently using that geometry. As you create hard points, they will appear in the mesh point editor in a tabular arrangement, and will be evident on the model and identifiable via a new mesh point symbol.

Cohesive entities

In support of the new multi-step nonlinear capabilities in NX Nastran solution sequences 401 and 402, Femap version 12 adds support for cohesive entities including elements, properties and materials, in addition to a new cohesive meshing function that inserts a layer of cohesive elements at a user-defined split location.

Postprocessing enhancements

Dynamic criteria

You can interactively adjust criteria limits using a slider bar to create dynamic criteria plots and optionally display criteria labels and/or use the absolute value of the selected output vector to help visualize results output.

Report generator

A dialog-controlled report generator is available that enables Femap to interact directly with Microsoft Word to seamlessly create an analysis report of the current model file. You can control the content of the report through tabs in the report generator dialog including:

- General information such as analyst name, company, organization and description
- Entities to include such as loads, constraints, output, groups, connections, layouts, etc.
- Images to include, with control of image views and formatting

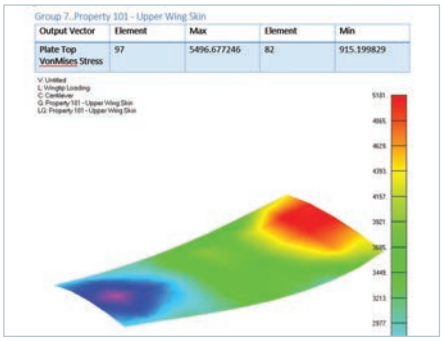

Solver support

Solver updates include support for multi-step nonlinear solutions, a new topology optimization capability, extensions to design optimization, as well as numerous enhancements to the ANSYS® solver interface.

Multi-step nonlinear solutions

NX Nastran solution sequences SOL 401 and SOL 402 are now supported in Femap version 12, allowing you to perform multi-step nonlinear analyses using the more flexible subcase-based analysis control of these solutions.

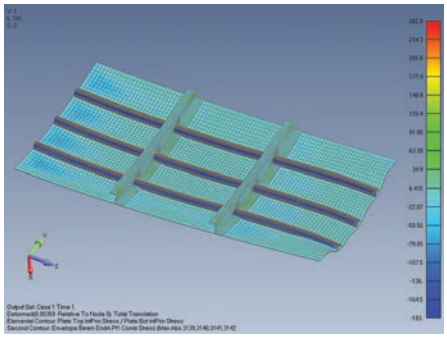

SOL 401 is the multi-step nonlinear solver where subcases can be dependent or independent of the previous subcase, and where you can change analysis type in a subcase. With this approach you can define linear, nonlinear, modal, and bolt preload subcases to create a combined solution in the analysis manager.

SOL 402 is the multi-step nonlinear solver with kinematics, which has similar workflows and combines the advantages of solution sequences 401 and 601. Both solutions support a wide variety of element and material types.

Design optimization

The design optimization solution sequence, SOL 200, has been updated to enhance ease of use and extend support for NX Nastran capabilities. You can now set up multiple design studies within a single model using the analysis manager. The types of solution supported have been expanded to include frequency response, model transient and steady aeroelasticity, and different solution sequences can be defined for each subcase. In addition, support for design variables, relationships, responses and constraints has been greatly enhanced.

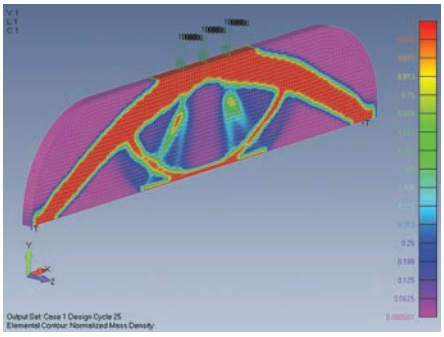

Topology optimization

The SOL 200 solution sequence also includes topology optimization and is supported by Femap version 12. Note, however, that the topology optimization capability in NX Nastran is intended to be for preview only in this release.

Compatible solution sequences include statics, modes, linear buckling, modal frequency and transient. Also a variety of 2D and 3D element types are supported, and there is support for manufacturing constraints. You can also export the final geometry, based on normalized mass density output, in STL format.

Siemens PLM Software
www.siemens.com/plm

Americas +1 314 264 8499
Europe +44 (0) 1276 413200
Asia-Pacific +852 2230 3308

©2018 Siemens Product Lifecycle Management Software Inc. Siemens and the Siemens logo are registered trademarks of Siemens AG. Femap, HEEDS, Simcenter 3D and Teamcenter are trademarks or registered trademarks of Siemens Product Lifecycle Management Software Inc. or its subsidiaries in the United States and in other countries. Simcenter, Simcenter Amesim, LMS Samtech Samcef, LMS Samcef Caesam, LMS SCADAS, LMS SCADAS XS, LMS Smart, LMS Test.Xpress, LMS Soundbrush, LMS Sound Camera, LMS Test.Lab and LMS Virtual.Lab are trademarks or registered trademarks of Siemens Industry Software NV or any of its affiliates. STAR-CCM+ and STAR-CD are trademarks or registered trademarks of Siemens Industry Software Computational Dynamics Ltd. All other trademarks, registered trademarks or service marks belong to their respective holders.
71987-A7 8/18 P