SIEMENS
Ingenuity for life

Siemens PLM Software

Tecnomatix quality management solutions

Closes the loop between production and design allowing you to continuously improve the quality process program after program

siemens.com/tecnomatix

Quality issues and your PLM strategy

Virtually every manufacturing organization struggles with quality issues due to part manufacturing and assembly build variation. If build variation is not properly managed, it can lead to poor product quality, rework, production delays and warranty issues – all of which directly impact your corporate bottom line. Effectively managing quality is a tremendous challenge that requires a well-defined quality process that actually begins early in the product development cycle. It involves a wide range of people in different organizations or companies, including styling, design, manufacturing, assembly, tooling and your suppliers. Managing quality also requires using interoperable tools throughout your design and manufacturing processes to create, maintain and share quality deliverables.

Discrete manufacturing organizations typically use disparate quality systems that have evolved out of need and local design. This results in a variety of inefficiencies, including labor-intensive document creation and its continued maintenance, duplicate data input, a lack of re-usable information and the proliferation of file or paper-based systems. Typically, these systems have no correlation to your company's digital product and manufacturing information. Similarly, they are disconnected from your supply chain, which prevents you from closing the loop on your quality process lifecycle.

Your company may be challenged by the following quality-related issues, which are common in many manufacturing operations:

- Disconnected quality systems across your product lifecycle
- Misaligned quality targets and production results
- Inability to unify your quality metrics by correlating your product design and manufacturing results
- Substantial investments required to achieve your quality goals

Siemens PLM Software's approach to quality management

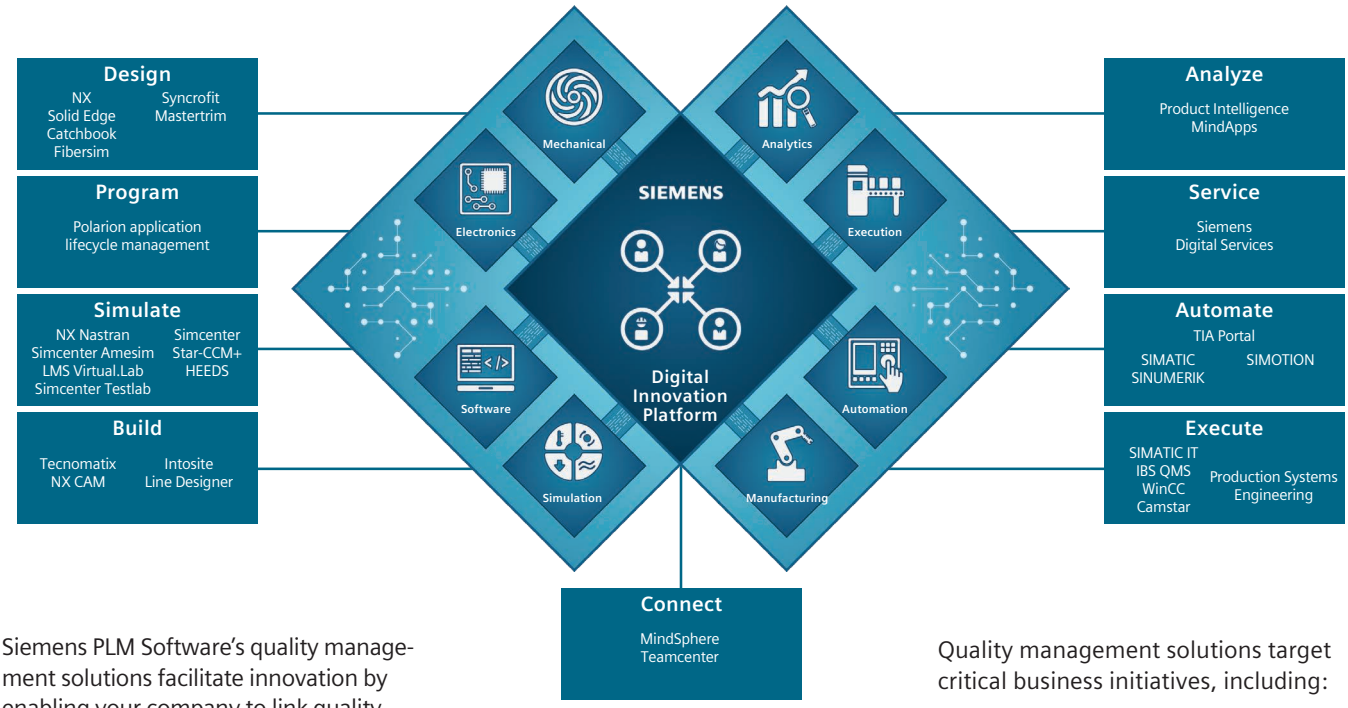

Siemens PLM Software's quality management solutions facilitate innovation by enabling your company to link quality disciplines with all of your manufacturing and product engineering domains, including your process layout and design, process simulation/engineering and production management systems. Siemens' comprehensive portfolio of quality solutions is built on Teamcenter® software, the world's most widely deployed product lifecycle management (PLM) foundation, which offers manufacturers the most versatile and scalable digital lifecycle management solution available.

Siemens' quality management solutions streamline the complete quality management process. By enabling you to incorporate robust quality management capabilities into your product development, manufacturing and production execution processes, Siemens' solutions position quality as an integral element of your PLM environment.

By using PLM to associate product, process, resource and production quality data, manufacturers have a full arsenal of process-oriented technology that enables them to establish their operations as leaders in digital design and digital manufacturing. Siemens' solutions bridge the gap between product design and product delivery by managing both the design and execution of manufacturing processes with a fully associative data model.

Siemens' quality management solutions can extend your PLM foundation to incorporate quality metrics into your product, process, resource and plant data. By leveraging Siemens' sophisticated PLM technology, you can surpass your competition with a comprehensive solution that directly addresses your most pressing quality-related issues in the same PLM environment you use to deliver quality products on a design anywhere, build anywhere, source anywhere and sell anywhere basis.

Siemens' quality management solutions can ensure crucial digital continuity throughout your product lifecycle. This continuity allows you to bring more innovative products to market faster, maintain quality and improve production efficiency, as well as to leverage the power of your global manufacturing operations and boost overall corporate profitability.

Quality management solutions target critical business initiatives, including:

New product development – Perform in-depth analysis during product development to ensure that your product designs can be built while achieving their quality targets.

Global design and development – Reap the benefits of knowing that your extended global enterprise is working on the same page throughout your portfolio's lifecycle.

Commonization and re-use – Streamline and standardize for efficiency; gain a competitive advantage in enabling quality throughout your production environments.

Knowledge/intellectual property management – Increase your quality management knowledge to ensure success and capture new insights for future development.

Compliance – Automate data collection at the point of manufacture to reduce risk and ensure compliance.

Production efficiency – Identify quality trends and escapes early so you can address these considerations in a timely manner.

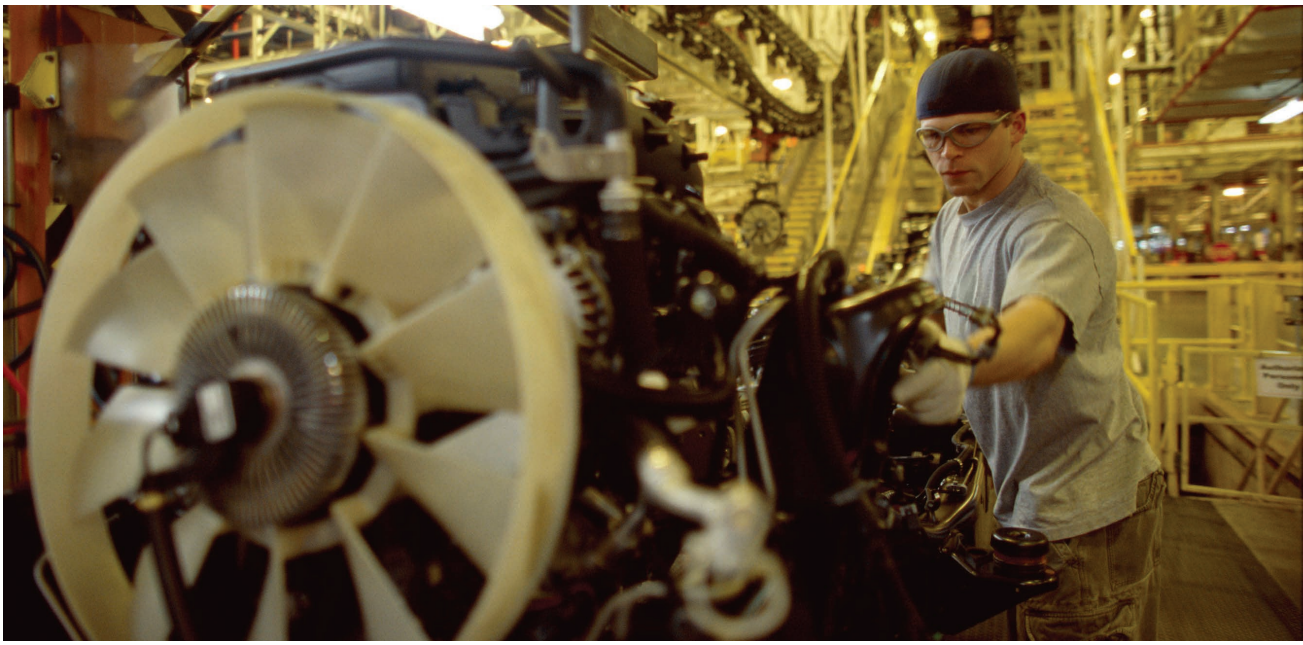

Business value of Siemens' quality management solutions

Siemens PLM Software's quality management solutions enable you to establish quality strategies that take full advantage of a PLM foundation. This closes a critical loop in the quality lifecycle from design engineering to as-built production and back, maximizing your best business strategy for long-term profitability and growth.

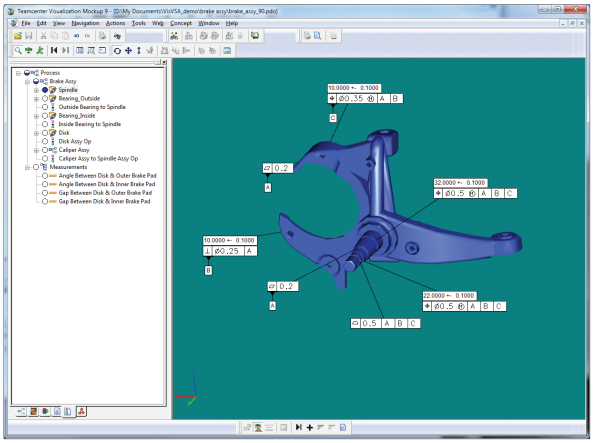

Reduce your cost of quality and development times

You can reduce the cost to achieve your quality targets by predicting variation and assembly build problems – before they happen. All dimensional characteristics can be analyzed early in the product development lifecycle, well before any physical parts are made or tooling is built. Assemblies can be optimized to identify the best tolerance and assembly datum targeting schemes. A simple no-cost locating change in your virtual environment may be all you need to meet your quality goals.

You can reduce costs by minimizing assembly build problems. Just imagine how much faster you can bring products to market if you could eliminate unnecessary tooling or reduce quality issues and rework by 30 percent. What if you could relax tolerances and eliminate unnecessary and expensive machining processes – without sacrificing product quality? If you really want to take the leap and eliminate physical prototypes, early assembly analysis is a must. It is the only effective way to ensure that you will not have assembly build problems.

Streamline the entire dimensional quality process

Siemens' quality management solutions provide a completely digital environment for your quality process from early concept through production. Siemens' quality management environment provides all of the tools needed to define quality data, make data-driven decisions, manage and coordinate changes through your product lifecycle and facilitate collaboration among multiple departments while ensuring the highest quality end product for your customer base.

Build more innovative products

The introduction of complex products should not mean a more complex quality process. Streamline your development process so that sophisticated products can be manufactured rapidly while achieving superior quality.

Leverage product change, updates and dependencies concurrently throughout your manufacturing process, ensuring superior quality and efficient use of production equipment. Automatically propagate dimensional design requirements to downstream manufacturing and quality applications where it is needed most – and do this without data duplication.

Build quality and compliance into your processes

Visibility into the details of product manufacturing is critical because quality problems and warranty costs quickly erode profitability and impact customer satisfaction. Digital content, process accountability and compliance throughout your manufacturing process allows full product and process genealogy and traceability for all products, from planning to as-built data requirements.

"At the initial design stage, they can analyze whether the structure, positioning and assembly methods meet technical specifications, and ultimately suggest how to optimize these factors to enhance the quality of body design."

Chery Automobile Co., Ltd.

Siemens PLM Software advantage

Siemens advantage	Why it matters
Open architecture for unparalleled leveragability	Siemens PLM Software is recognized as the world's premier provider of product lifecycle management solutions as defined by numerous criteria, including technological achievement, market share, industry experience and an installed base of world-class customers. Backed by Siemens' proven ability to deliver collaborative product data management (cPDM) solutions to over five million worldwide users, Siemens' quality management solutions are built on the de facto standard for PLM deployment. The entire Siemens PLM Software portfolio leverages an open PLM architecture, enabling Siemens' quality management solutions to integrate with any PDM system. This flexibility translates into more cost effective deployments and unparalleled flexibility that enables you to integrate your Siemens' PLM investments with other enterprise systems.
World-class application portfolio	Quality management solutions from other vendors lack either the application coverage or true associative CAD integration to improve your entire manufacturing cycle. Similarly, they often lack the management underpinnings to leverage your company's entire range of product lifecycle information on a global scale. Siemens is uniquely able to offer a comprehensive and integrated suite of industry-leading, workflow-based applications that address all of your manufacturing requirements in a flexible CAD-embedded or CAD-neutral environment.
Industry-specific value	Siemens' quality management solutions support a broad range of industries, including automotive, trucking, heavy equipment, aerospace, defense, consumer products and machinery – and that only begins to scratch the surface of Siemens' proven experience. This makes it easy for you to implement quality management solutions that reflect your industry's best practices.

Product design

• Tecnomatix Variation Analysis

Manufacturers are under intense competitive pressure to improve the dimensional quality of their products. Poor dimensional quality will cause assembly build problems resulting in parts that do not fit or function properly. This will inevitably lead to unnecessary quality issues, rework and warranty defects – all of which significantly impact your corporate bottom line. In addition, many manufacturers have implemented initiatives to eliminate physical prototypes, reduce their development costs and accelerate their time-to-market. How do you ensure that your first production assembly generated from a virtual prototype is going to work? Can you really afford to shut down one of your production lines because dimensional variation adversely impacts your next product launch?

Siemens' powerful dimensional analysis tools enable you to predict the amounts and causes of variation in your manufacturing operations. These tools reduce the negative impact of variation on quality, cost and time-to-market. Your engineers can create a 3D digital prototype to simulate production, including a full representation of parts, tolerances and process variation. You can use this model to predict build problems and identify their root causes – before physical parts are made or tooling is built. This digital approach allows your engineers to evaluate changes and verify that these changes will actually fix the problem early in the design process, where changes are less expensive.

Optimize your product and process

Siemens' quality management solutions enable you to identify and fix dimensional problems early in the design cycle, thereby avoiding assembly build and quality launch issues caused by excessive variation. With these solutions, design and assembly process flaws can be resolved before the physical parts are made or tooling is built.

Identify critical dimensions and key characteristics

Siemens' quality management solutions identify critical dimensions, tolerances and assembly processes that significantly contribute to variation. Since these considerations significantly impact product quality, manufacturers require a design quality solution capable of providing careful monitoring.

Reduce costs

Siemens' quality management solutions reduce development costs by improving product quality, eliminating physical prototypes and accelerating time-to-market. In addition, manufacturing costs can be reduced by maximizing allowable part tolerances (allowing the use of faster, cheaper and less costly manufacturing processes), while still maintaining critical assembly dimensional specifications. Controlling these dimensional characteristics helps minimize quality issues, rework and warranty defects. As a result, product quality and your corporate bottom line are significantly improved by ensuring that parts fit and work together properly – the first time.

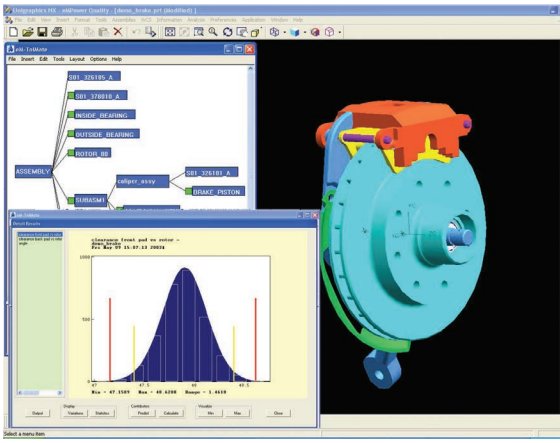

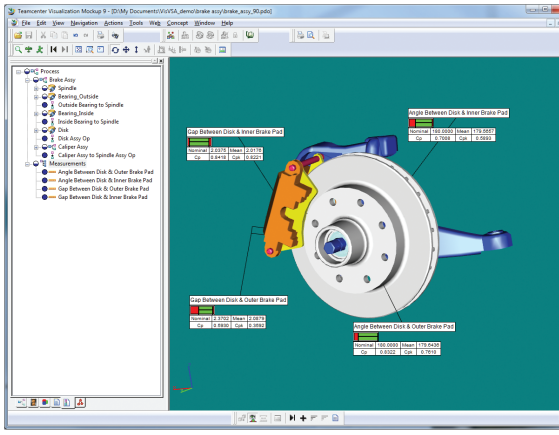

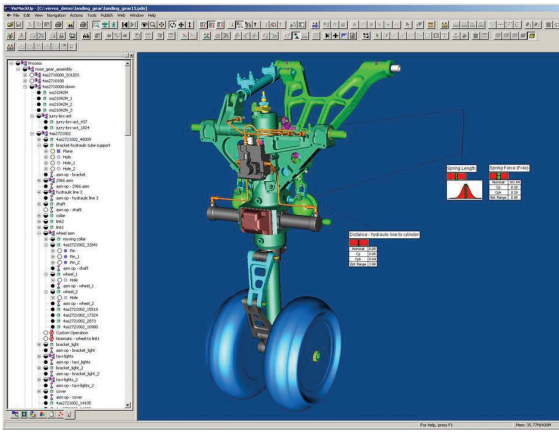

Manufacturing

• NX CMM

The growing adoption of Six Sigma and lean manufacturing initiatives highlights the importance that manufacturers place on continued product quality improvement. However, despite this emphasis, many manufacturers find it difficult to provide their quality improvement teams with the information and tools they need to fulfill their missions properly.

Siemens' quality management solutions help manufacturers achieve their quality and cost targets by providing the right information to the right person at the right time.

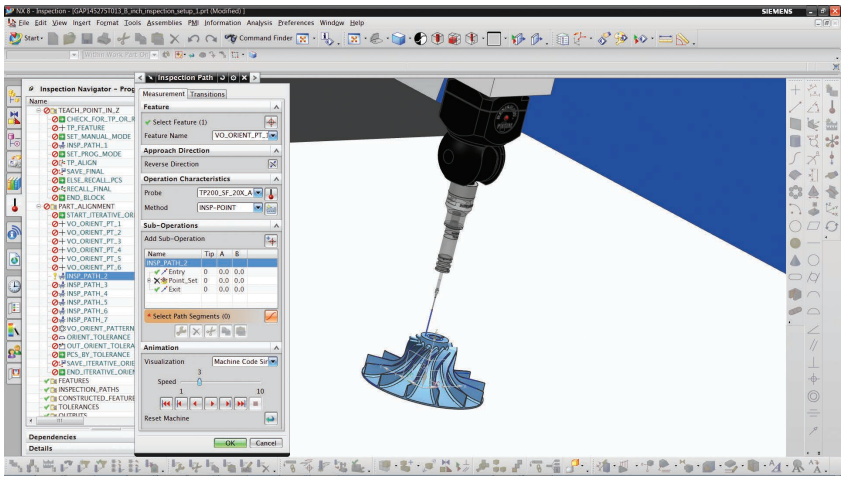

Leverage your CAD investment

Your computer-aided design (CAD) system is a major IT investment. Utilizing existing systems to perform additional work only makes good business sense. Siemens' quality management solutions utilize your CAD systems to create programs for your coordinate measurement machines (CMMs). Your products' geometry already appears in a CAD format, so it would be most efficient to create your CMM programs directly from the CAD model.

CMM programs can be saved into your PLM/PDM system since your CMM programs are embedded within the CAD file. You can easily propagate your product and manufacturing information (PMI) down to your quality programming application. This leads to lower cost of implementation and lower cost of total ownership since you are re-using solutions you already have and leveraging your existing corporate standards.

You can significantly reduce the cost of engineering changes through the use of associative geometry updates. Product features, tolerances and probe paths are associative to the CAD geometry and PMI so that when the geometry or tolerance definition changes, the inspection feature definition will automatically update to incorporate the engineering change. In addition to lowering the cost of engineering change, this approach accelerates your time-to-market with the correct product.

In-depth analysis

Viewing the measurements in your CAD system allows you to see how the real part compares with the nominal, as-designed part. Since a picture is worth a thousand words, you are much more likely to see a problem and properly resolve it with the first try. As you know, it is not uncommon for users to say that a hole needs to move 0.025 inches and then, for whatever reason, to inadvertently shim the part in the wrong direction.

You can adjust tolerances after the fact to better understand a problem. A very powerful method is to add surface profile tolerances to get a better idea of where a group of features has moved. Again, the result is to determine the amount of part movement needed to move the features into an acceptable location.

Finally, working in the CAD system promotes the usage and review of inspection results by your engineers and designers. Instead of using a flat file or having to learn another application, they can use the same CAD environment they use on an everyday basis.

Production

- Tecnomatix Dimensional Planning and Validation
- Tecnomatix CMM Inspection Execution

Companies spend millions of dollars collecting measurement inspection data to monitor and improve their manufacturing processes. Much of this investment is not fully leveraged because there often is no effective way to manage and visualize that data so it can be easily accessed from any desktop in an enterprise. Effectively capturing measurement inpection data can provide you with a key competitive advantage, help improve quality and reduce your product development costs.

Siemens' quality management solutions help manufacturers enhance their quality initiatives by providing an easy-to-use web-based reporting environment and a powerful graphical environment that you can use to analyze build quality issues, provide decision support data and collaborate in the process of resolving issues throughout your enterprise. By making quality information immediately accessible, you can understand your plants' quality issues, their historical trends and the differences between individual plants in your manufacturing operation. This enables your company to attain its quality objectives faster and more cost effectively.

Resolve production build problems

Siemens' quality management solutions help identify and resolve production build problems by reporting and analyzing data as it becomes available directly from your corporate measurement or inspection equipment and supply chain providers. You can leverage Siemens' solutions to quickly determine the root cause of product quality issues from any location in the world, thereby minimizing the travel required to address your quality issues.

Evaluate historical records

Summary reports consolidate extremely large amounts of measurement data, enabling decision makers to quickly review this information. You can use this capability to request data from any time period in a report that helps you understand your quality trends. You can also use this information to compare processes and/or plants, understand your processes' stability and summarize your company's quality performance over any time period.

Streamline the quality process and improve communication

Siemens' quality management solutions streamline your quality documentation process by providing a fast and efficient way to associate measurement data with 3D geometry. You can create and update technical documents in seconds by using Siemens' revolutionary publishing technology to provide smart connectivity between 3D geometry and the measurement data source. You can use Siemens' production quality environment to graphically display, analyze and communicate production measurement data throughout your extended enterprise. This provides a tremendous productivity gain compared with traditional approaches that typically require the use of many disconnected software tools and systems.

You can minimize your CMM operator training requirements with a common user interface for each machine, as well as a consistent data analysis and reporting platform, which is customizable with standard off-the-shelf programming tools.

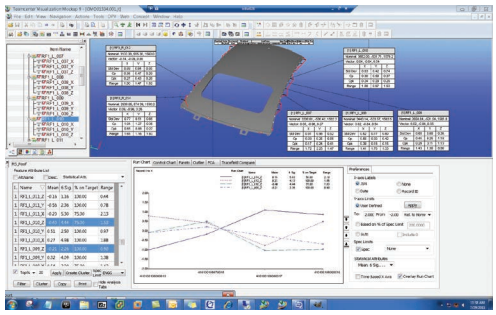

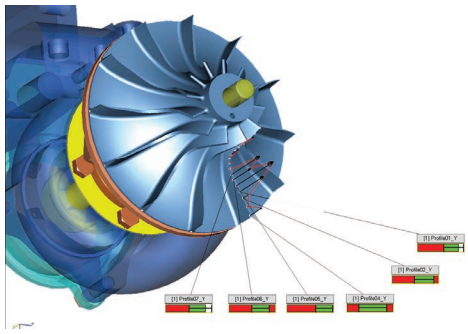

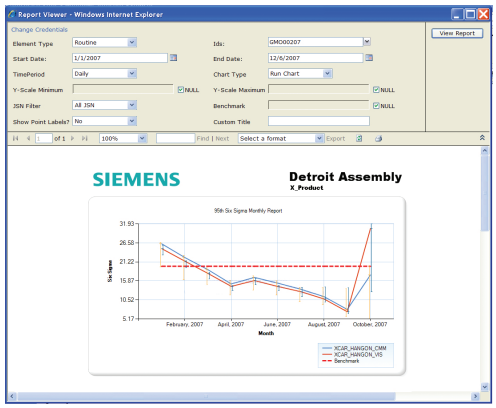

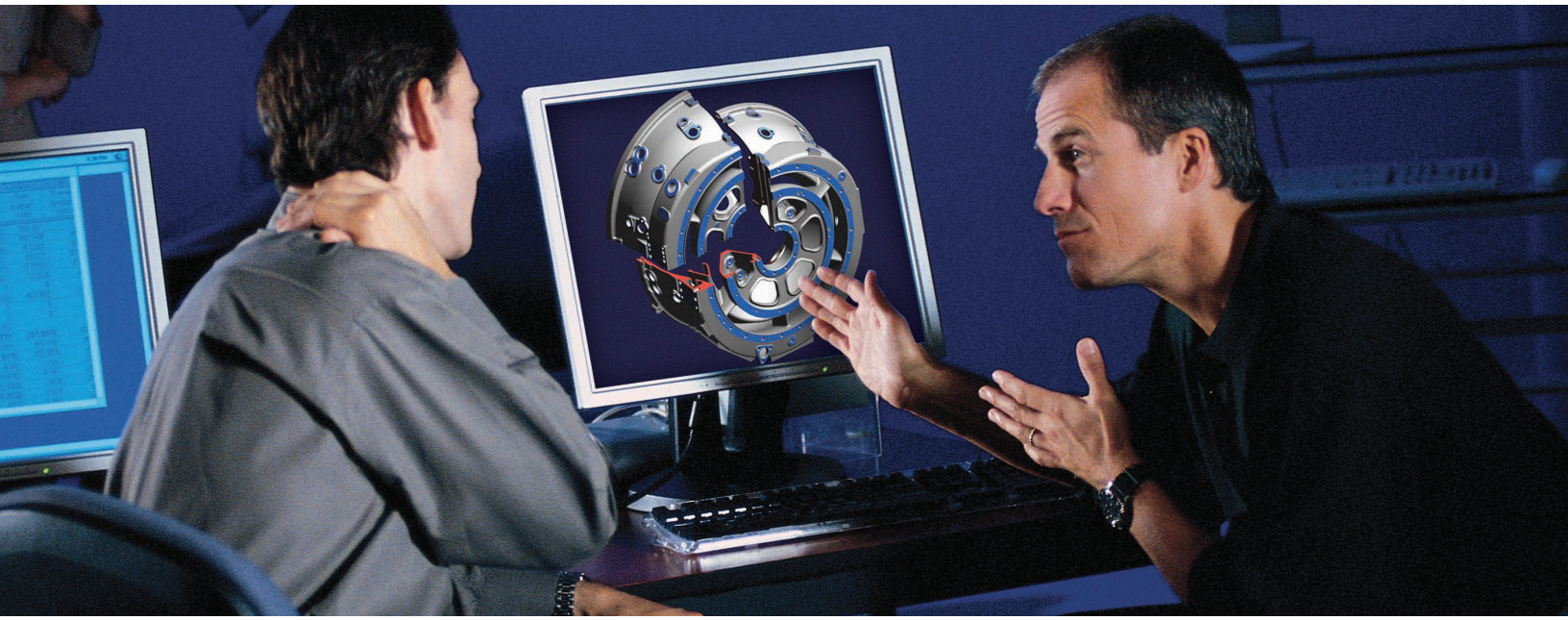

Teamcenter and PLM Open – your enterprise foundation for quality management

Teamcenter backbone

Siemens' quality management solutions utilize the power of Teamcenter. This helps companies organize their product, manufacturing and quality knowledge in associated data structures that can be re-used in future product programs and multiple quality improvement initiatives. With best practices reflected in product features, resource libraries, process templates and plant layouts, you can eliminate time wasted on duplicate efforts and ensure that your quality teams are always implementing optimal improvement plans.

PLM Open – open foundation, open applications, open for business

To improve competitiveness, manufacturers must be able to leverage best-in-class solutions from a variety of vendors and partners. For example, many companies need to leverage CAD data from multiple systems. With the rise of global outsourcing and extended enterprises, an effective digital manufacturing strategy must accommodate data from third-party and legacy systems.

Siemens is committed to developing technology and conducting business in a way that meets customer requirements for openness. Siemens solutions leverage the JT™ data format – collaboration used throughout the global manufacturing industry.

Siemens PLM Software applications share a common data model called the lifecycle data architecture (LDA) through an open Teamcenter backbone, which ensures that applications are tightly integrated and managed within the open Teamcenter environment. In addition, software tools, such as JT Open, PLM Vis and PLM XML, help Teamcenter regulate the persistent and real-time flow of product, process, resource and plant data throughout your PLM processes.

At Siemens, openness is more than just a technology claim; it is a way of doing business. Siemens has organized communities of customers, partners and technology adopters that are dedicated to advancing the principle of open communication for open innovation.

Siemens quality knowledge management

Siemens' quality management solutions are particularly valuable because they are powered by Teamcenter, the industry's leading product lifecycle knowledge management environment. Teamcenter enables organizations to establish digital continuity from start to finish. With full visibility into your product lifecycle processes, all of the entitled participants in your extended enterprise are able to react to change more effectively, make the right decisions earlier and contribute to your processes for building high quality products faster and more cost effectively.

A single source of knowledge

According to industry reports, manufacturing engineers spend over half their time searching for data. Siemens' quality management solutions make information available to these users on demand by leveraging Teamcenter or whatever PDM system your company employs. Teamcenter can manage all the information you use to define your products, processes, production resources and plant facilities. This gives users complete confidence that they are working with the correct data in configurations that simplify their jobs.

Leverage knowledge on new product programs

You can manage all of your company's key intellectual property in Teamcenter, including all of your product program information. Knowing this, you can leverage and re-use existing product, process, plant and quality-related information in future product programs. This allows you to leverage your best practices and existing know-how to create and execute the most efficient quality systems for your newest improvement initiatives.

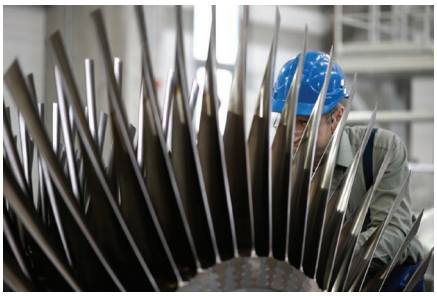

About Siemens PLM Software

Siemens PLM Software, a business unit of the Siemens Digital Factory Division, is a leading global provider of software solutions to drive the digital transformation of industry, creating new opportunities for manufacturers to realize innovation. With headquarters in Plano, Texas, and over 140,000 customers worldwide, Siemens PLM Software works with companies of all sizes to transform the way ideas come to life, the way products are realized, and the way products and assets in operation are used and understood. For more information on Siemens PLM Software products and services, visit www.siemens.com/plm.

Headquarters:	+1 972 987 3000
Americas:	+1 314 264 8499
Europe:	+44 (0) 1276 413200
Asia-Pacific:	+852 2230 3333

© 2018 Siemens Product Lifecycle Management Software Inc. Siemens, the Siemens logo and SIMATIC IT are registered trademarks of Siemens AG. Camstar, D-Cubed, Femap, Fibersim, Geolus, GO PLM, I-deas, JT, NX, Parasolid, Solid Edge, Syncrofit, Teamcenter and Tecnomatix are trademarks or registered trademarks of Siemens Product Lifecycle Management Software Inc. or its subsidiaries in the United States and in other countries. Simcenter is a trademark or registered trademark of Siemens Industry Software NV or its affiliates. All other trademarks, registered trademarks or service marks belong to their respective holders.

12277-A25 8/18 A